Sep.1.2025 Copyright 2025 HIROSE ELECTRIC CO., LTD. All Rights Reserved.
In case of consideration for using Automotive equipment / device which demand high reliability, kindly contact our sales window correspondents.

RoHS, ELV CONPLIANT

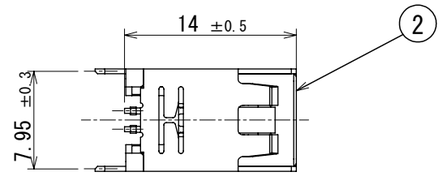


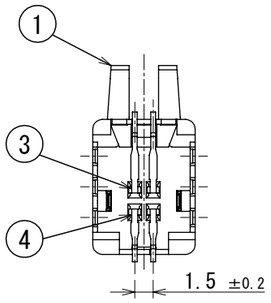


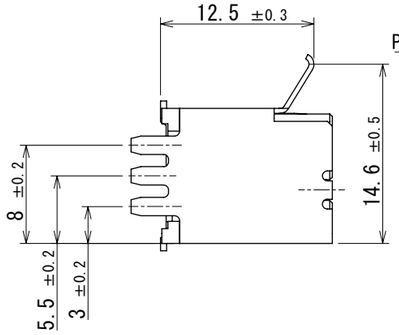


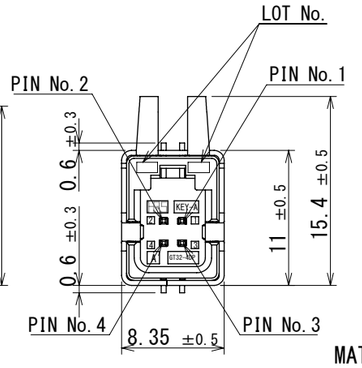


Fig. ADDED A PICK & PLACE TAPE

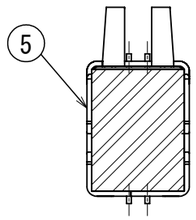


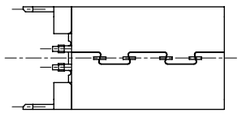

MATED CONNECTORS

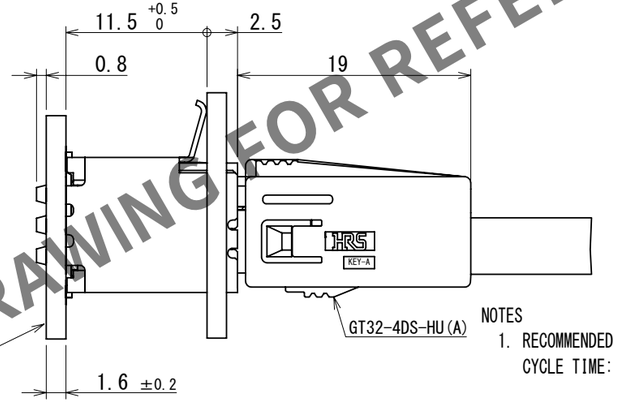


PACKING STYLE

5 TRAYS STACKING.
STACK TRAY A(168146-4) AND TRAY B(168176-0) STAGGERED.
TOP TRAY IS EMPTY.

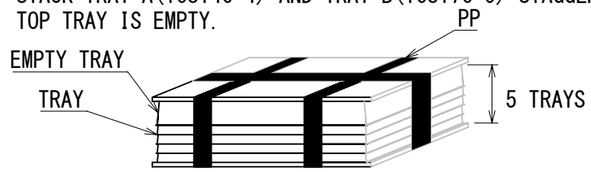


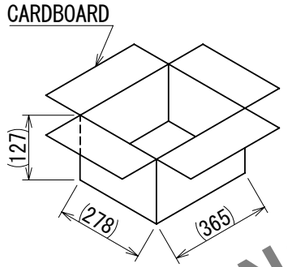


CARDBOARD : 420PCS

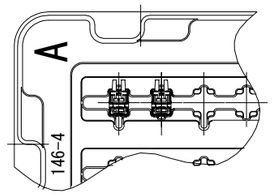


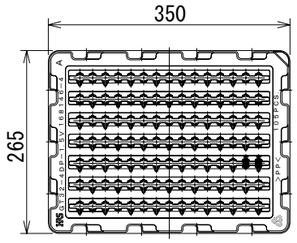


1TRAY : 105PCS

RECOMMENDED PCB LAYOUT
(4:1)

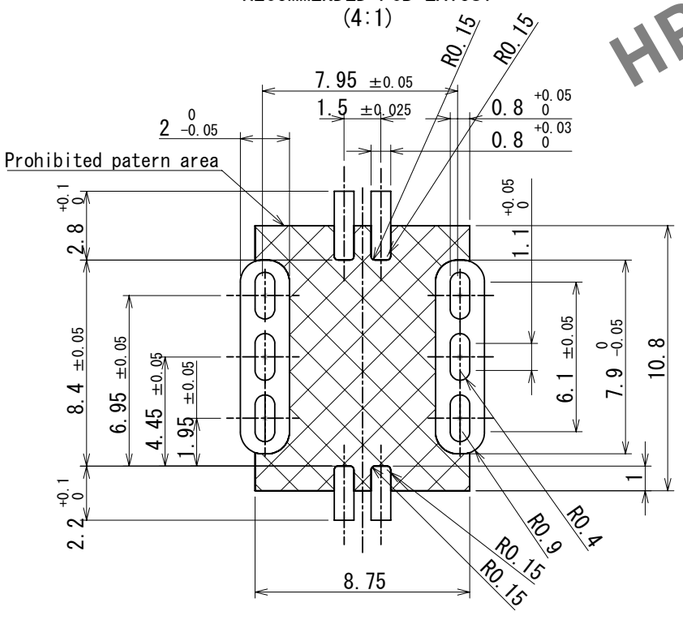


RECOMMENDED PANEL CUTOUT

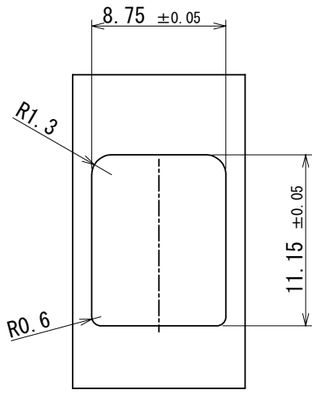


NOTES

1. RECOMMENDED REFLOW PROFILE (SEE RIGHT GRAPH)
   CYCLE TIME: UP TO 2 CYCLES OF REFLOW SOLDERING ARE POSSIBLE UNDER THE CONDITIONS, PROVIDED THAT THERE IS A RETURN TO NOMAL TEMPERATURE BETWEEN THE FIRST AND SECOND CYCLE.
   PEAK TEMPERATURE: 250℃
   230℃ MIN, FOR 20 TO 40 SECONDS.
   PREHEATING AREA 150～180℃ FOR 60 TO 120 SECONDS.
2. HAND SOLDERING: 280～300℃, 2SECONDS MAX.
3. CONTACT COPLANARITY: 0.1mm MAX.
4. RECOMMENDED THICKNESS OF PCB: 1.6mm
5. RECOMMENDED THICKNESS OF SOLDERING PASTE: 0.12mm

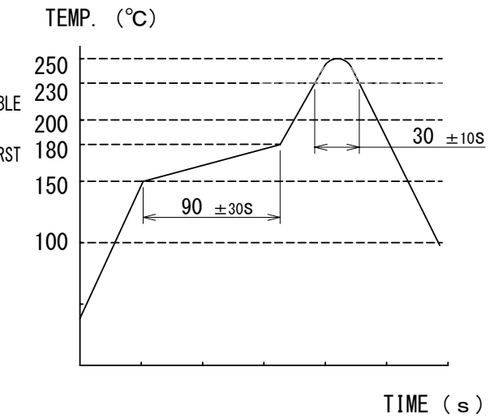


| NO. | MATERIAL | FINISH , REMARKS | NO. | MATERIAL | FINISH , REMARKS |
|---|---|---|---|---|---|
| 3 | BRASS | TIN PLATING | | | |
| 2 | PA | BROWN | 5 | POLYIMIDE | PICK & PLACE TAPE |
| 1 | COPPER ALLOY | TIN PLATING | 4 | BRASS | TIN PLATING |

| UNITS | SCALE | COUNT | DESCRIPTION OF REVISIONS | DESIGNED | CHECKED | DATE |
|---|---|---|---|---|---|---|
| mm | 2:1 | 0 | DIS-T-00018480 | KN. YANAGIMOTO | EJ. WAKATSUKI | 2023. 07. 03 |

HIROSE ELECTRIC CO., LTD.

| | | | | |
|---|---|---|---|---|
| APPROVED : | AR. SHIRAI | 2017. 07. 19 | DRAWING NO. | EDC-362123-00-00 |
| CHECKED : | TH. MIZUGUCHI | 2017. 07. 19 | PART NO. | GT32-4DP-1.5V(A) |
| DESIGNED : | TS. KUBOTA | 2017. 07. 19 | CODE NO. | CL0782-0065-4-00 |
| DRAWN : | TS. KUBOTA | 2017. 07. 19 | | 2 1/1 |

HRS DRAWING FOR REFERENCE